Work Order ID 73443

Thursday, September 01, 2011 7:28:48 AM

Item ID: D2013-3 **Accept** **Setup Start**

Revision ID:

Item Name: Mirror Bracket LH, 212 **Stop**

Start Date: 8/31/2011 **Start Qty:** 4.00 **Cust Item ID:**

Required Date: 9/16/2011 **Req'd Qty:** 4.00 **Customer:**

Reference:

Approvals: **Process Plan:** CL **Date:** 11/09/01 **Tooling:** **Date:** **Run Start**

QC: **Date:** **SPC (Y/N):** **Date:** **Stop**

Sequence ID/ Work Center ID	Operation Description	Set Up/ Run Hours	Tool ID	Tool #	Plan Code	Accept Qty	Reject Qty	Reject Number	Insp. Stamp
Draw Nbr	**Revision Nbr**								
D2013	Rev C								
100		0.00							
Brake NC	NC BRAKE					4			
	Memo	0.00							
Brake NC	1-Punch as per template D2013-T3 and Dwg D2013 SB 11/09/13 EJ 11/09/23 2-Flatten ends of D2013-3 tube as per Dwg D2013 using DT8545 → EJ 11/09/23 3-Bend (1) tube as per Dwg D2013 using Jig DT8201 SB 11/10/04 Identify as D2013-3. 4-Deburr as required → EJ 11/09/23					4 4			
110	QC5- Inspect part completeness to step on W/O	0.00							
QC	**Memo**	0.00 S 11/10/05				~~4~~ 3			
Quality Control									

Dart Aerospace Ltd

W/O:		WORK ORDER CHANGES					
DATE	STEP	PROCEDURE CHANGE	By	Date	Qty	Approval Chief Eng / Prod Mgr	Approval QC Inspector

Part No: _____ **PAR #:** _____ **Fault Category:** _____ **NCR:** Yes No **DQA:** _____ **Date:** _____

Resolution: _____ **Disposition:** _____ **QA: N/C Closed:** _____ **Date:** _____

NCR:		WORK ORDER NON-CONFORMANCE (NCR)						
DATE	STEP	Description of NC Section A	Corrective Action Section B			Verification Section C	Approval Chief Eng	Approval QC Inspector
			Initial Chief Eng	Action Description Chief Eng	Sign & Date			

NOTE: Date & initial all entries

H:\fFORMS\Quality Assurance\approved QA\NCRWO RevE

Work Order ID 73443

Thursday, September 01, 2011 7:28:48 AM

Item ID: D2013-3 **Accept** **Setup Start**

Revision ID: **Stop**

Item Name: Mirror Bracket LH, 212

Start Date: 8/31/2011 **Start Qty:** 4.00 **Cust Item ID:**

Required Date: 9/16/2011 **Req'd Qty:** 4.00 **Customer:**

Reference:

Run Start

Approvals: **Process Plan:** _____ **Date:** _____ **Tooling:** _____ **Date:** _____

Stop

QC: _____ **Date:** _____ **SPC (Y/N):** _____ **Date:** _____

Sequence ID/ Work Center ID	Operation Description	Set Up/ Run Hours	Tool ID	Tool #	Plan Code	Accept Qty	Reject Qty	Reject Number	Insp. Stamp
120	Identify as per dwg & Stock Location:_____	0.00							
Packaging	Basket cell						11/10/05		
	Memo	0.00							
Packaging									
130	QC21 - Final Inspection - Work Order Release	0.00							
QC							11/10/5		
	Memo	0.00							
Quality Control									

mk 11-10-5

Dart Aerospace Ltd

W/O:		WORK ORDER CHANGES					
DATE	STEP	PROCEDURE CHANGE	By	Date	Qty	Approval Chief Eng / Prod Mgr	Approval QC Inspector

Part No: _____ **PAR #:** _____ **Fault Category:** _____ **NCR:** Yes No **DQA:** _____ **Date:** _____

Resolution: _____ **Disposition:** _____ **QA: N/C Closed:** _____ **Date:** _____

NCR:		WORK ORDER NON-CONFORMANCE (NCR)						
DATE	STEP	Description of NC Section A	Corrective Action Section B			Verification Section C	Approval Chief Eng	Approval QC Inspector
			Initial Chief Eng	Action Description Chief Eng	Sign & Date			

NOTE: Date & initial all entries

H:\fFORMS\Quality Assurance\approved QA\NCRWO RevE

Picklist Print

Thursday, September 01, 2011 7:28:45 AM

Work Order ID: 73443

Parent Item: D2013-3

Parent Item Name: Mirror Bracket LH, 212

Start Date: 8/31/2011 **Required Date:** 9/16/2011

Start Qty: 4.00 **Required Qty:** 4.00

Comments: IPP Rev:A New Issue 05-11-01 JLM

Component Item ID/ Item Name	Replacement Item ID	Mfg/ Purch	Bin Item	Primary Location	Last Location	Route Seq ID	Unit of Measure	Qty on Hand	Qty per Kit	Total Qty	Qty Issued	Date Issued	Status
M304TR0.750W.049 304 RD Tube .750 x .049W		Purchased	No			100	f	281.8496	1.9473	8.199158 SB 11/09/13			

Location	Loc Qty	Loc Code	
MAT017	281.84963		
109314	9.333		
111619	3		
112187	4		
112800	11		
114852	2.75		
116108	3		
116720	1.833		
117030	3.09263		
117797	0.75		
117983	143.091		
118390	100		10

Dart Aerospace Ltd

W/O:		WORK ORDER CHANGES					
DATE	STEP	PROCEDURE CHANGE	By	Date	Qty	Approval Chief Eng / Prod Mgr	Approval QC Inspector

Part No: _____ **PAR #:** _____ **Fault Category:** _____ **NCR:** Yes No **DQA:** _____ **Date:** _____

Resolution: _____ **Disposition:** _____ **QA: N/C Closed:** _____ **Date:** _____

NCR:		WORK ORDER NON-CONFORMANCE (NCR)						
DATE	STEP	Description of NC Section A	Corrective Action Section B			Verification Section C	Approval Chief Eng	Approval QC Inspector
			Initial Chief Eng	Action Description Chief Eng	Sign & Date			

NOTE: Date & initial all entries

H:\fFORMS\Quality Assurance\approved QA\NCRWO RevE

RELEASED
KE 99.06.10

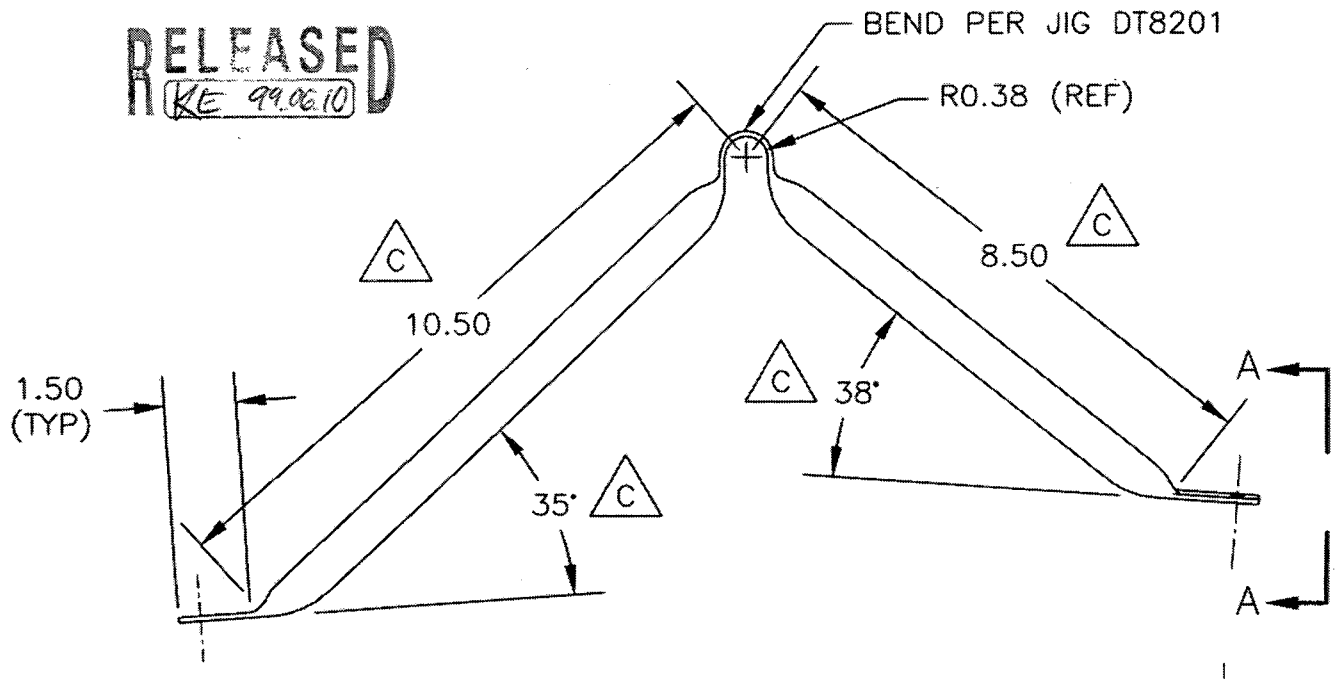

D2013-1 LH SHOWN
D2013-2 RH OPPOSITE
(FOR 205 MIRROR)

SHOP COPY
RETURN TO ENGINEERING
UNCONTROLLED COPY
SUBJECT TO AMENDMENT
WITHOUT NOTICE
WORK ORDER
NO. 73443
CL 11/09/01

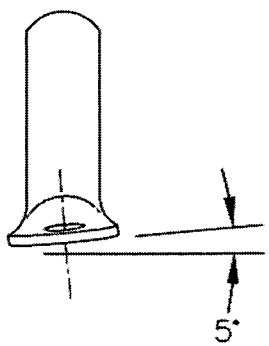

VIEW A-A

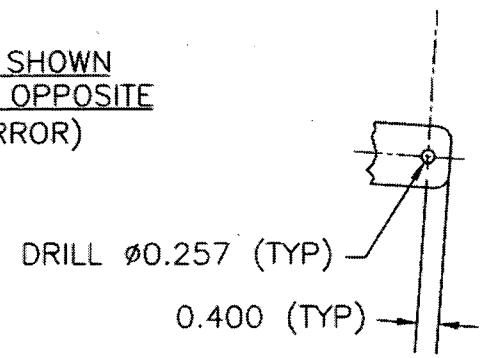

CUT LENGTH: 23.25 INCHES

MATERIAL: AISI 304/316 SS SEAMLESS TUBE,
0.750 OD x 0.049 WALL

A	90.10.22	NEW ISSUE
B	94.06.15	REDRAWN
C	99.06.07	REDRAWN, CHANGE OF DIMENSIONS

DESIGN: JB.
DRAWN BY: RF
CHECKED: KE
APPROVED: [illegible]
DATE: 99.06.07
DRAWING NO. D2013
TITLE: MIRROR BRACKET
SCALE: NTS
SHEET 1 OF 3
REV. C

DART AEROSPACE LTD
HAWKESBURY, ONTARIO, CANADA

DART

QA COPY ISSUED

Copyright 1990 by DART AEROSPACE LTD

RELEASED
KE 99.06.10

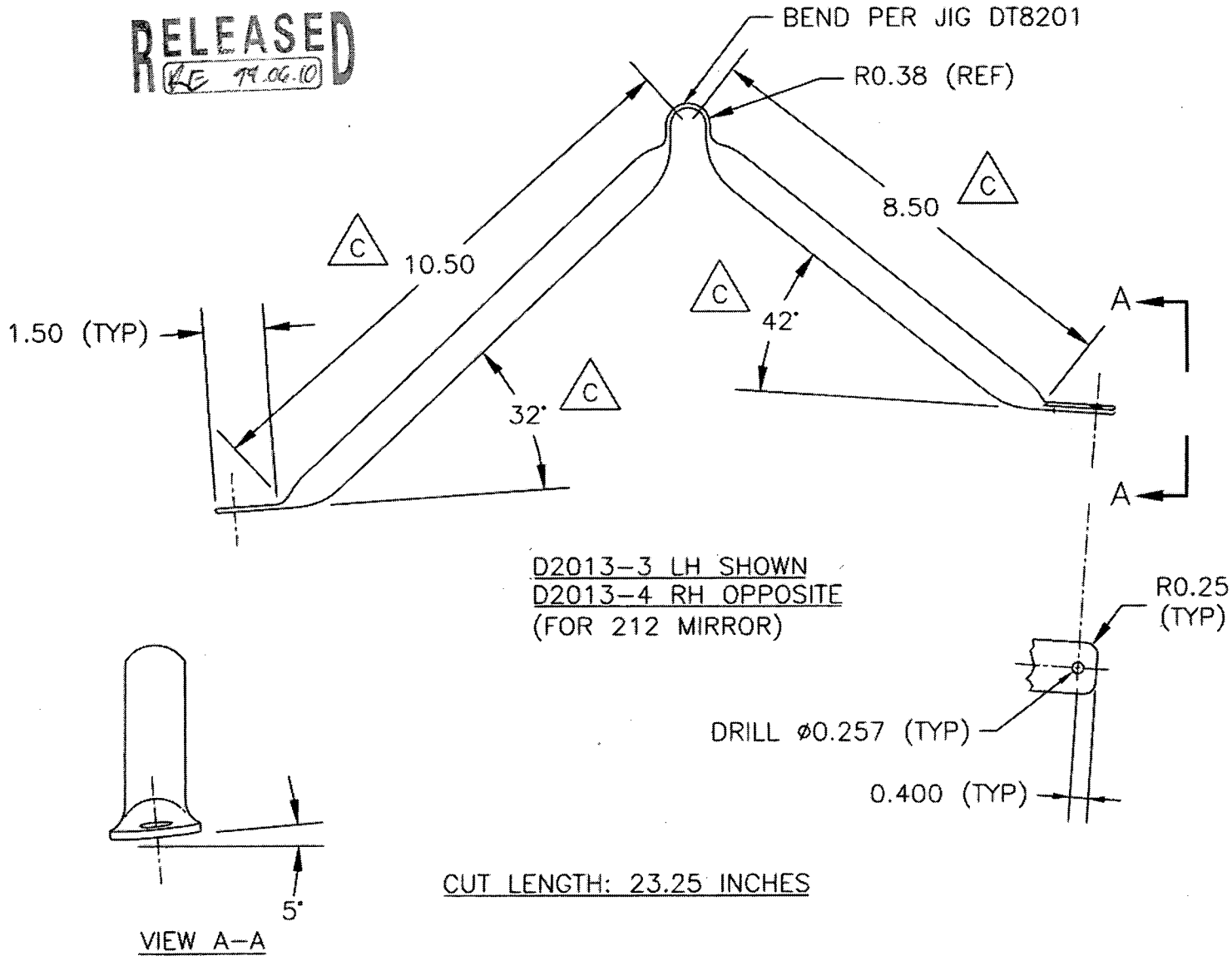

D2013-3 LH SHOWN
D2013-4 RH OPPOSITE
(FOR 212 MIRROR)

VIEW A-A

CUT LENGTH: 23.25 INCHES

MATERIAL: AISI 304/316 SS SEAMLESS TUBE,
0.750 O.D. x 0.049 WALL

DART

A COPY ISSUED

DESIGN	DRAWN BY	DART AEROSPACE LTD HAWKESBURY, ONTARIO, CANADA	
JB	RF		
CHECKED	APPROVED	DRAWING NO.	REV.
KE		D2013	C
DATE		TITLE	SHEET 2 OF 3
99.06.07		MIRROR BRACKET	SCALE NTS

Copyright 1990 by DART AEROSPACE LTD

RELEASED
RE 99.06.10

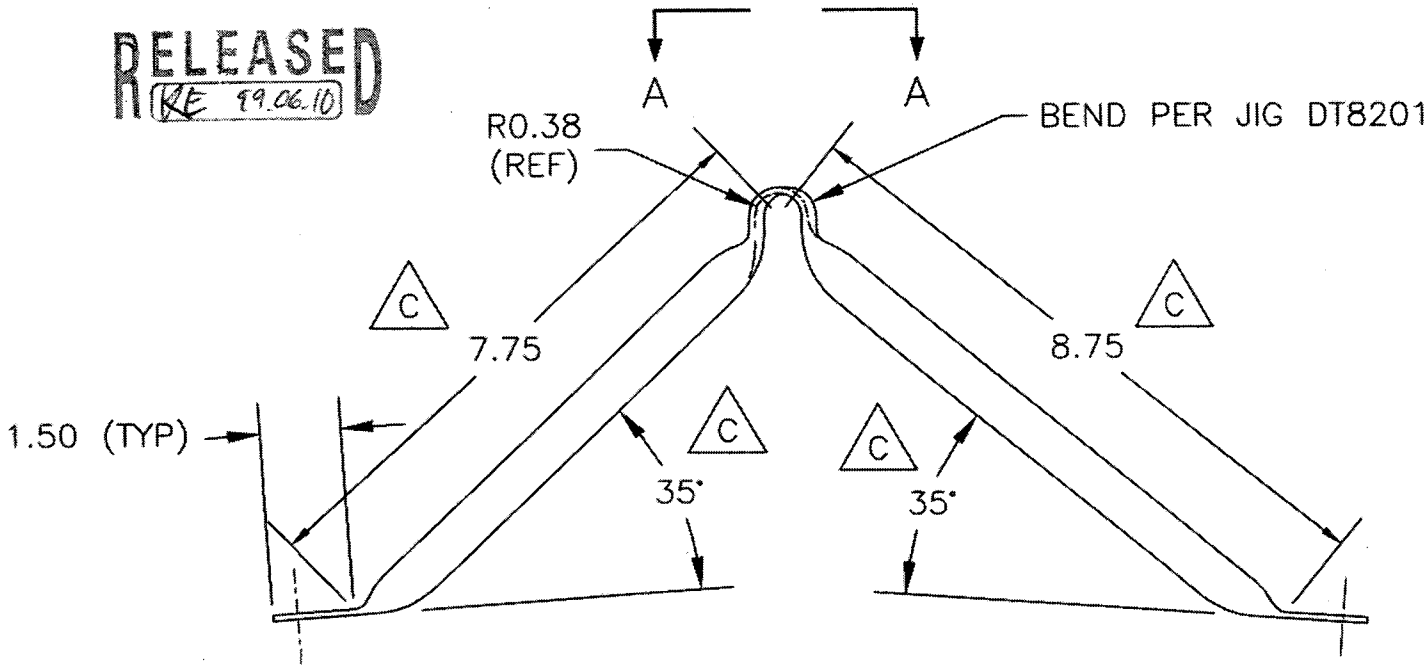

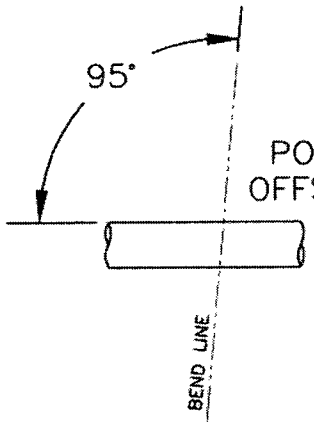

POSITION TUBE
OFFSET 5° IN JIG

VIEW A–A

D2013–5 LH SHOWN
D2013–6 RH OPPOSITTE
(FOR 204 MIRROR)

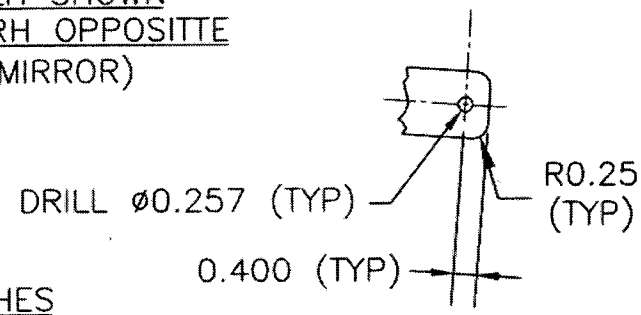

CUT LENGTH: 20.75 INCHES

MATERIAL: AISI 304/316 SS SEAMLESS TUBE,
0.750 O.D. x 0.049 WALL

DART

COPY ISSUED

DESIGN JB	DRAWN BY RB	DART AEROSPACE LTD HAWKESBURY, ONTARIO, CANADA	
CHECKED RE	APPROVED	DRAWING NO. D2013	REV. C
DATE 99.06.07		TITLE MIRROR BRACKET	SHEET 3 OF 3
			SCALE NTS

Copyright 1990 by DART AEROSPACE LTD